DOCUMENTATION SHEET

Rubber Design
vibration and noise control

TORQUE COMPENSATION SYSTEM®

TCS

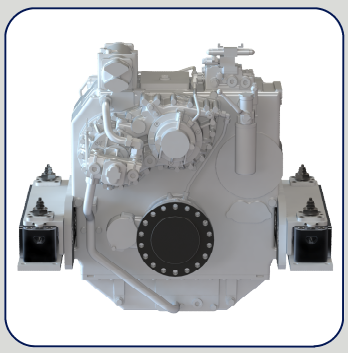

Improvement of noise levels in the yachting industry

In most modern propulsion installations, engine vibrations are well isolated from the ship's foundation by means of excellent resilient engine mounts. However, engine vibrations are also transmitted over the coupling to the gearbox. Semi-elastic gearbox mounts used nowadays have a relative high stiffness compared to other mounts used on machinery, due to the torque transmitting function. As a result, low-frequency engine vibrations are poorly isolated and transferred to the ship's foundation. The newly developed Torque Compensation System provides a mounting option with only a fraction of the stiffness compared to conventional gear-box mounts. Soft gearbox mounts in combination with light weight high torque gearboxes would normally result in unacceptable torque displacements. However with the TCS compen-sating for torque displacements, softer gearbox mounts become an option

TCS principle

The mount consists of two conical rubber spring elements supporting the gearbox weight and two air springs that can produce a counterforce to compensate for torque displacements. The rubber conical elements are height adjustable for alignment purposes. Internal adjustable displacement limiters prevent excessive displacements of the gearbox under all conditions, therefore there is no need for external limiters. The TCS control unit constantly compares the measured gearbox position with the gearbox neutral position and (if necessary) adjusts the air spring pressures to maintain the gearbox position.

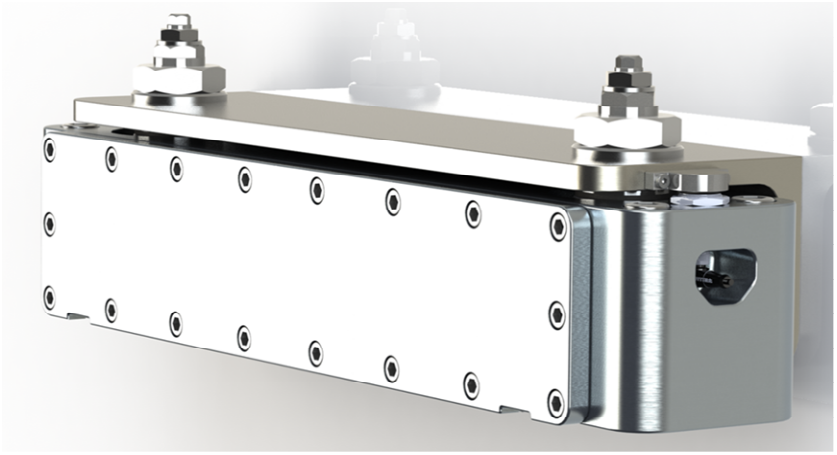

TCS

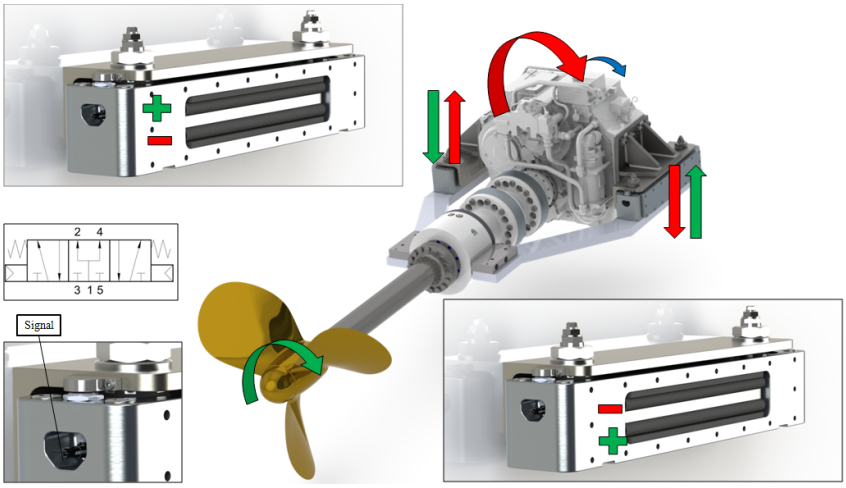

TCS working principle

Influence of reduced stiffness on the structure borne noise isolation

A reduced dynamic stiffness (k) directly results in a reduction of forces transmitted to the ship's foundation. A lower excitation force transferred to the ships foundation means a lower/ improved structure borne noise level. Compared to an average conventional semi-elastic gear-box suspension, TCS has a 95% lower dynamic stiffness resulting in an improvement of more than 25 dB and effective isolation of the engine firing frequency.

$$Transfer\ Fuction(T) = \frac{F}{a} = \frac{F}{x} * \frac{1}{\omega^2} = k * \frac{1}{\omega^2} \quad [\mathrm{kg}]$$

$$Isolation = L_T + 20 * \log\omega - L_Z \quad [\mathrm{dB}]$$

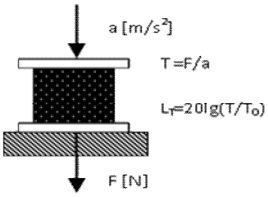

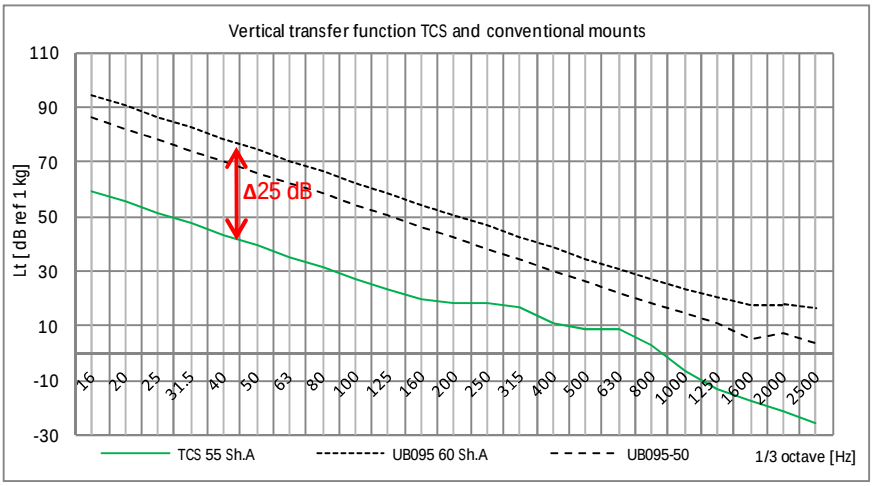

Vertical transfer function

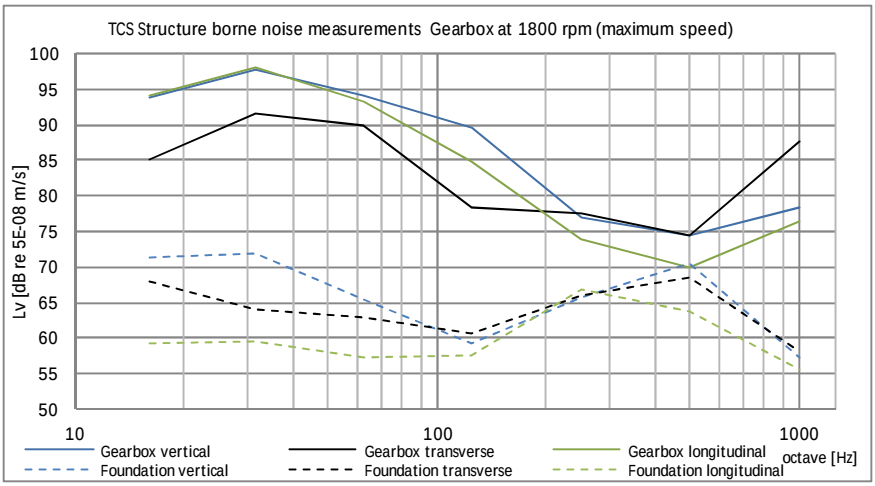

Isolation performance TCS

TYPE APPROVALS

TORQUE COMPENSATION SYSTEM®

TCS

ANV Innovation LTD.
Ticaret Merkezi, Evliya Çelebi Mh.
Küme Sk. No:2 C:14, 34903 Tuzla/İstanbul

Phone : 0216 395 0718
E mail : info@anvinnovation.com
Web : www.anvinnovation.com