Rubber Design
vibration and noise control

DOCUMENTATION SHEET

Propulsion Equipment
SMART-LINK flexible coupling

SMART-LINK
Flexible Coupling

Introducing the new SMART-LINK flexible coupling

The Rubber Design SMART-LINK flexible coupling (**S**table **M**ovement, **A**xial, **R**adial, **T**orsional) is a newly developed coupling using rubber torque-links with interior cord inlays. The high degree of allowable displacements and associated low stiffness-es makes the SMART-LINK flexible coupling particularly suitable for the application with soft mounted flexible systems.

The SMART-LINK flexible coupling is specifically designed for usage between the propeller shaft with a separate thrust bearing and the gearbox. However it's also well suited for waterjets, thrusters, alternators, electric motors and (hydraulic) pumps. The single and dubble row torque-link design has an optimal torque capacity versus the smallest possible outside diameter. The SMART design of the coupling results in the smallest possible built-in length with maximum flexibility.

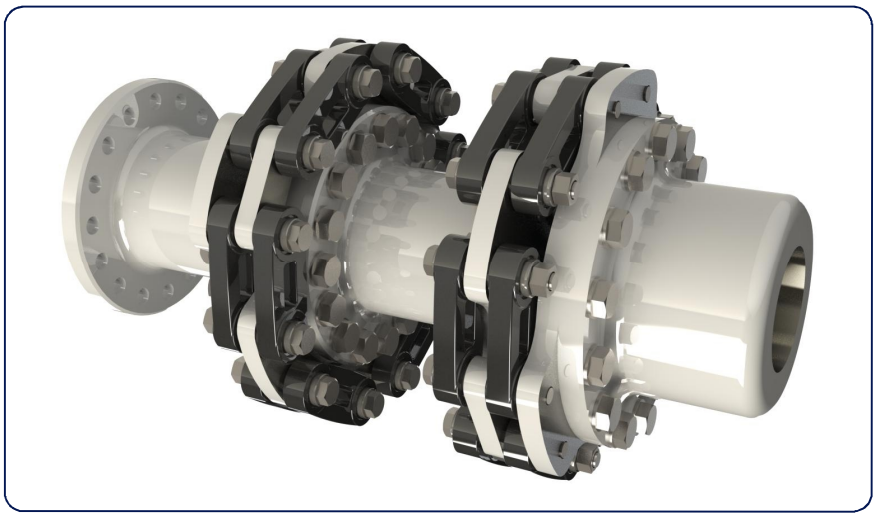

Features of the SMART-LINK flexible coupling

- From 1.35 kNm to 394.7 kNm torque capacity , divided in eleven standard sizes
- Designed for the smallest possible diameter and built-in length
- High operation angle/displacements allowed
- Excellent isolation of structure-borne noise
- Damping of torsional vibrations
- Reduction of torque fluctuations
- Classification approval for example Lloyd's Register, ABS, DNV-GL possible
- Can be supplied with an adaptor flange and/or adaptor shaft, to fit all possible components
- Steel parts are supplied with corrosion-resistant protection for improved service life

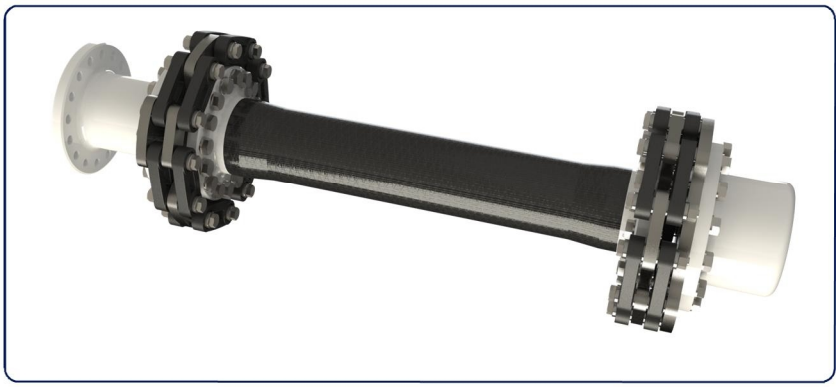

Exclusive partner supplier for marine coupling Components of Rubber Design

Süddeutsche Gelenkschreibenfabrik GmbH & Co Kg

http://www.sgf.com

industry@sgf.com

+49 8638 605-588

Rubber Design
vibration and noise control

Exclusive worldwide sales partner for marine propulsion equipment for SGF

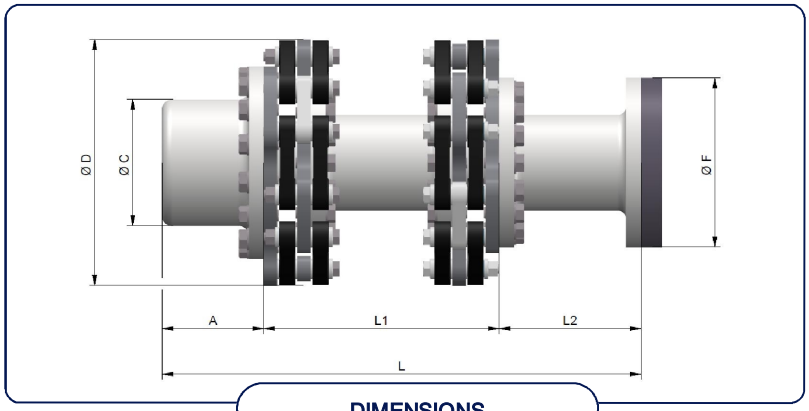

DIMENSIONS

	Dimensions [mm]							Max. Nom. Torque**	Maximum Torque	Max Speed
	A	C	D	L1*	L2	F	L	[kNm]	[kNm]	[rpm]
SL 202	80	80	162	200	To be determined	To be determined	To be determined	1,35	3,70	5800
SL 203	110	100	195	213,5				2,04	5,60	5100
SL 204	110	100	195	213,5				2,55	7,00	5100
SL 206	125	140	255	266				5,40	14,90	4100
SL 208	175	180	320	296				10,10	27,70	3700
SL 210	200	220	385	326				16,10	40,20	3400
SL 211	245	250	485	440				29,80	81,50	2500
SL 212	280	280	625	450				53,80	147,60	2200
SL 213	300	350	670	480				72,60	199,30	2100
SL 214	345	380	800	520				105,20	288,90	1900
SL 215	395	470	920	535				143,70	394,70	1800

CHARACTERISTICS

*L1 is noted as the minimum build-in length, longer intermediate shafts can be supplied by Rubber Design.

** Based on a maximum continuous oscilating torque of 10% of the nominal torque

CARBON FIBRE INTERMEDIATE SHAFT

Lengths up to 12 meter are possible when the SMART-LINK coupling is combined with a CFRP intermediate shaft. Less weight, less bearings and much less installation work are just a few of the benefits. For each individual application the carbon fibre orientation is tuned for optimal torsion and bending characteristics. Electrical insulating glass fibre shafts and bulkhead seals are also available.

Specification

The SMART-LINK flexible couplings are manufactured in steel with a protective coating. The coupling will maintain drive in the event of exceeding the maximum torque due to additional safety factor on the torque-links. All SMART-LINK flexible couplings can be supplied with an adaptor flange and/or adaptor shaft, to fit all available reduction gearbox brands worldwide.

Remarks

It is our intention to maintain the excellent standard of our products. Modifications and improvements may be made from time to time and it is therefore advisable to contact us before ordering.

SMART-LINK

Flexible coupling

ANV Innovation LTD.
Ticaret Merkezi, Evliya Çelebi Mh.
Küme Sk. No:2 C:14, 34903 Tuzla/İstanbul

Phone : 0216 395 0718
E mail : info@anvinnovation.com
Web : www.anvinnovation.com