Rubber Design
vibration and noise control

DOCUMENTATION SHEET

Propulsion Equipment
Type Twin marine coupling

MARINE COUPLING

## General

Pre-compressed rubber blocks form the basis of all flexible coupling designs. The blocks accommodate movement in all directions, making couplings exceptionally tolerant of relative propeller shaft displacements in combination with flexible mounted propulsion engine and providing controlled damping of torsional vibration excitation.

## Advantages of a flexible marine coupling

- Reduction of torque fluctuations
- Damping of torsional vibrations
- Reduction of resonance symptoms
- Compensating of radial, axial and angular shaft displacements
- Isolation of vibration and noise transmission

## Specification

The flexible couplings are standard manufactured in steel and seawater resisting aluminum. Other materials e.g. non-magnetic stainless steel can be supplied if required. The coupling will maintain drive in the event of damage occurring to the rubber elements. All flexible marine couplings can be supplied with an adaptor flange or adaptor shaft, to fit any available reduction gearboxes brand worldwide.
In addition to the standard range, heavy duty and special couplings can be made to meet particular requirements .

Twin marine coupling

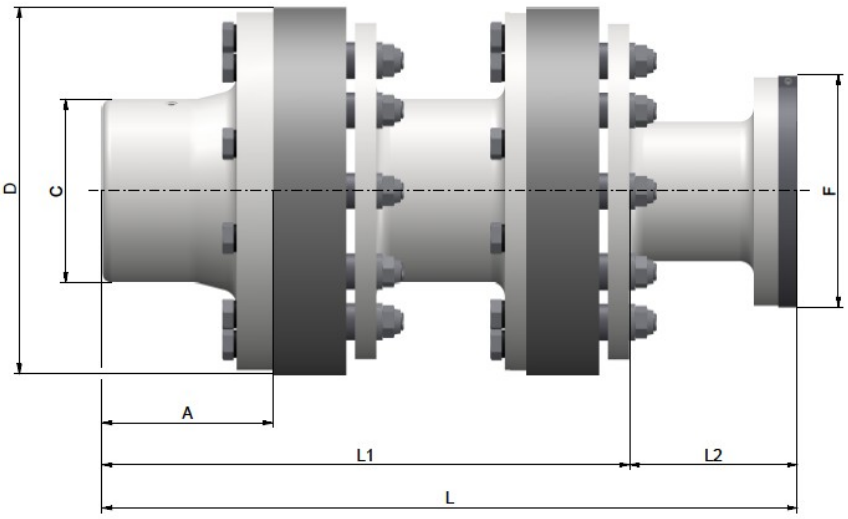


DIMENSIONS

### Selection

When using a "Twin" coupling, the free shaft end—the distance between the output flange of reverse gear and the centre of the first propeller shaft bearing - is less than the minimum required length $L_{MIN}$. The first propeller shaft bearing should be positioned directly behind the coupling.

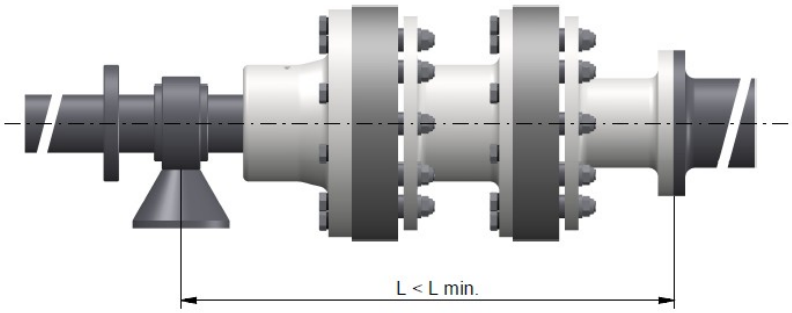


$$L_{min} = 20 \times (d - 0{,}9)\ [cm]$$

[d = diameter propeller shaft [cm]

The characteristics table is ideal for initial selection; however, it is advisable to seek expert advise before finalizing an installation design. Rubber Design is eager to support you by making calculations as a service, to ensure a proper functioning system.

| | Dimensions [mm] | | | | | | | Nominal torque | Max Torque | Max Thrust capacity | Max Speed |
|---|---|---|---|---|---|---|---|---|---|---|---|
| | A | C | D | L1 | L2 | F | L | [kNm] | [kNm] | [kN] | [rpm] |
| ERD 202 | 100 | 90 | 220 | 391 | To be determined | To be determined | L1 + L2 | 0,75 | 2,25 | n.a. | 4500 |
| ERD 203 | 115 | 105 | 245 | 416 | | | | 1,25 | 3,75 | n.a. | 4050 |
| ERD 204 | 150 | 130 | 295 | 461 | | | | 2,20 | 6,60 | n.a. | 3375 |
| ERD 205 | 160 | 145 | 345 | 481 | | | | 3,35 | 10,05 | n.a. | 2900 |
| ERD 206 | 175 | 160 | 345 | 506 | | | | 4,05 | 12,15 | n.a. | 2900 |
| ERD 207 | 180 | 170 | 370 | 630 | | | | 5,60 | 16,90 | n.a. | 2700 |
| ERD 208 | 180 | 180 | 395 | 681 | | | | 7,30 | 21,90 | n.a. | 2475 |
| ERD 209 | 235 | 200 | 445 | 741 | | | | 11,2 | 33,60 | n.a. | 2250 |
| ERD 210 | 240 | 220 | 445 | 860 | | | | 16,2 | 48,60 | n.a. | 2250 |
| ERD 211 | 245 | 240 | 490 | 870 | | | | 24,5 | 73,50 | n.a. | 2025 |
| ERD 212 | 290 | 275 | 600 | 875 | | | | 40,5 | 121,50 | n.a. | 1650 |
| ERD 213 | 295 | 335 | 685 | 1014 | | | | 60,47 | 181,40 | n.a. | 1400 |
| ERD 214 | 350 | 375 | 825 | 1075 | | | | 88,20 | 264,60 | n.a. | 1200 |
| ERD 215 | Under construction | | | | | | | 119,50 | 358,60 | n.a. | 1000 |

CHARACTERISTICS

### Engineering

CAD drawings (2D/3D) of the flexible marine couplings are available in different formats so that this geometry can be easily imported into the CAD drawing of the complete propeller shaft installation. All flexible marine couplings can be delivered with the required classification approval.

### Remarks

It is our intention to maintain the excellent standard of our products. Modifications and improvements may be made from time to time and it is therefore advisable to contact us before ordering.

**ANV Innovation LTD.**
Ticaret Merkezi, Evliya Çelebi Mh.
Küme Sk. No:2 C:14, 34903 Tuzla/İstanbul

Phone : 0216 395 0718
E mail : info@anvinnovation.com
Web : www.anvinnovation.com