Rubber Design
vibration and noise control

DOCUMENTATION SHEET

Propulsion Equipment
Type Single marine coupling

MARINE COUPLING

General

Pre-compressed rubber blocks form the basis of all flexible coupling designs. The blocks accommodate movement in all directions, making couplings exceptionally tolerant of relative propeller shaft displacements in combination with flexible mounted propulsion engine and providing controlled damping of torsional vibration excitation.

Advantages of a flexible marine coupling:
- Reduction of torque fluctuations
- Damping of torsional vibrations
- Reduction of resonance symptoms
- Compensating of radial, axial and angular shaft displacements
- Isolation of vibration and noise transmission

Specification

The flexible couplings are standard manufactured in steel and seawater resisting aluminum. Other materials e.g. non-magnetic stainless steel can be supplied if required. They can be supplied with or without propeller thrust capacity and will maintain drive in the event of damage occurring to the rubber elements. All flexible marine couplings can be supplied with an adaptor flange or adaptor shaft, to fit any available reduction gearboxes brand worldwide. In addition to the standard range, heavy duty and special couplings can be made to meet particular requirements .

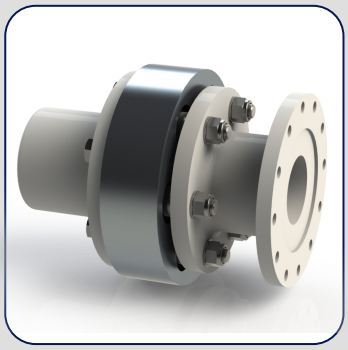

Single marine coupling

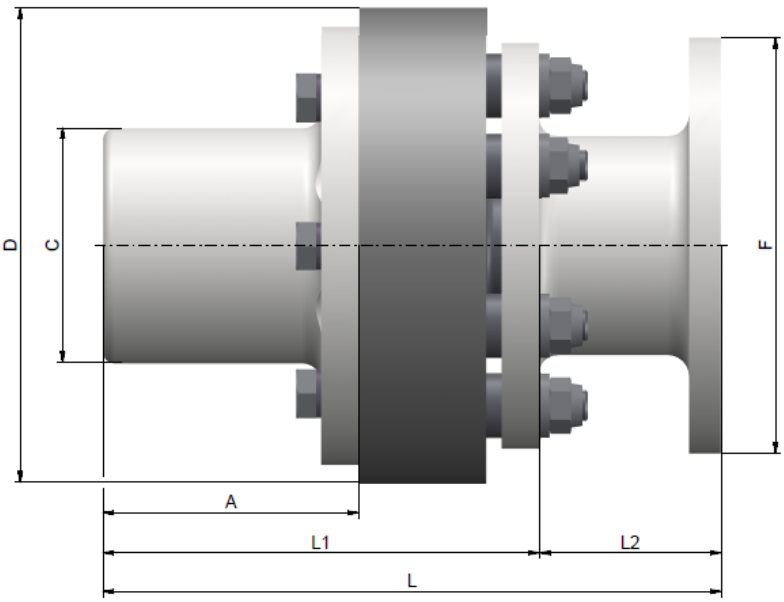

DIMENSIONS

MARINE COUPLING

Selection

When using a "Single" coupling, the free shaft end - the distance between the output flange of reverse gear and the centre of the first propeller shaft bearing - must have a length between L_{MIN} and L_{MAX}. If the distance is less than the minimal required length, a Twin cordanic coupling must be used.

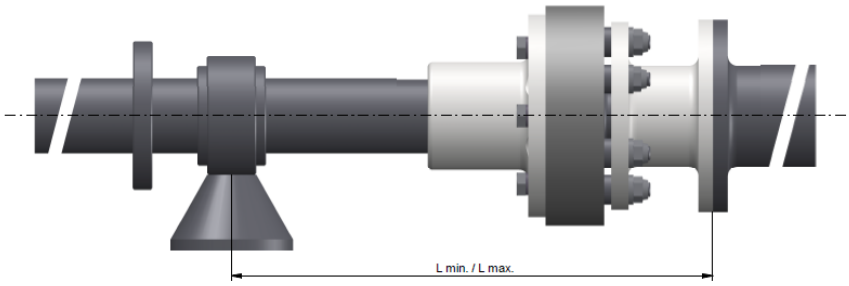

$$L_{MIN} = 20 \times (d - 0{,}9)\ [cm] \qquad L_{MAX} = 2900 \times \sqrt{(d / n)}\ [cm]$$

[d = diameter propeller shaft [cm] and n = propeller shaft rpm]

The characteristics table is ideal for initial selection; however, it is advisable to seek expert advise before finalizing an installation design. Rubber Design is eager to support you by making calculations as a service, to ensure a proper functioning system.

	Dimensions [mm]							Nominal torque	Max Torque	Max Thrust capacity	Max speed
	A	C	D	L1	L2	F	L	[kNm]	[kNm]	[kN]	[rpm]
ERD 102	100	90	220	194	To be determined	To be determined	L1 + L2	0,75	2,25	30	6000
ERD 103	115	105	245	209				1,25	3,75	30	5400
ERD 104	150	130	295	244				2,20	6,60	30	4500
ERD 105	160	145	345	254				3,35	10,05	60	3875
ERD 106	175	160	345	269				4,05	12,15	60	3875
ERD 107	180	170	370	333				5,60	16,90	90	3600
ERD 108	180	180	395	333				7,30	21,90	90	3300
ERD 109	235	200	445	388				11,20	33,60	90	3000
ERD 110	240	220	445	410				16,20	48,60	125	3000
ERD 111	245	240	490	415				24,50	73,50	125	2700
ERD 112	290	275	600	460				40,50	121,50	150	2200
ERD 113	295	335	685	470				60,47	181,40	n.a.	2000
ERD 114	350	375	825	530				88,20	264,60	n.a.	1800
ERD 115	Under construction							119,50	358,60	n.a.	1600

CHARACTERISTICS

Engineering

CAD drawings (2D/3D) of the flexible marine couplings are available in different formats so that this geometry can be easily imported into the CAD drawing of the complete propeller shaft installation. All flexible marine couplings can be delivered with the required classification approval.

Remarks

It is our intention to maintain the excellent standard of our products. Modifications and improvements may be made from time to time and it is therefore advisable to contact us before ordering.

ANV Innovation LTD.
Ticaret Merkezi, Evliya Çelebi Mh.
Küme Sk. No:2 C:14, 34903 Tuzla/İstanbul

Phone : 0216 395 0718
E mail : info@anvinnovation.com
Web : www.anvinnovation.com