Rubber Design
vibration and noise control

DOCUMENTATION SHEET

Propulsion Equipment
Type Gearbox mounting

GEARBOX MOUNTING

General

TG（Torque Gearbox）or so called Semi Elastic suspensions were designed specially for free standing gearboxes and/or close coupled high speed engines/gearboxes where the mountings have to absorb the torque reaction in combination with full propeller thrust. The TG mountings provides sufficient load capacity combined with long service life. Although originally designed for gearboxes and close coupled engines/gearboxes mounting arrangements are particularly versatile and can be used for many other applications.

Specification

The characteristics of the TG mountings are provided by inner and outer precision metal sleeves, which are strongly bonded together by vulcanization between rubber and metal surfaces. The TG mountings damp radial and axial vibrations and withstand torsion and cardanic deflection. Load ranges up to 85 kN each mounting. The rubber elements are manufactured standard in two ‘standard’ rubber hardness: 50NR, 60NR. Applicable up to 70°C continuous and 90°C peak temperatures.

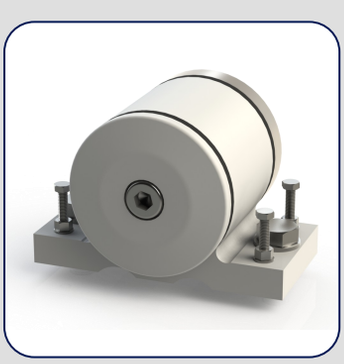

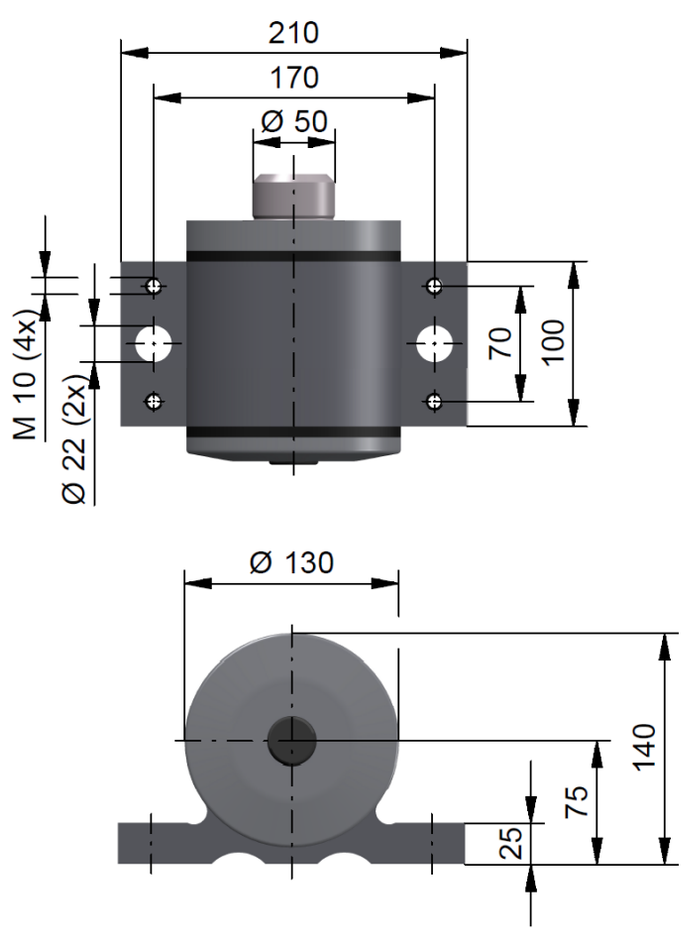

DIMENSIONS

Mounting selection

The characteristics table is ideal for initial selection; however, it is advisable to seek expert advise before finalizing an installation design. Rubber Design is eager to support you by making 6 degrees of freedom calculations as a service, to ensure a proper functioning resilient mounting system.

	Hardness [°Sh. A]	Max. load [kN]	Max static defl. [mm]
TG095	60	85	0,9
TG095	50	58	0,9
TG360	60	42	1,7

CHARACTERISTICS

Engineering

More detailed drawings and installation instructions, as well as specific mounting versions with alternative connection dimensions, tailored to your needs, can be provided upon request

Remarks

It is our intention to maintain the excellent standard of our products. Modifications and improvements may be made from time to time and it is therefore advisable to contact us before ordering.

Specials

Besides the single TG mounting, there is also a double and triple or more bush versions.

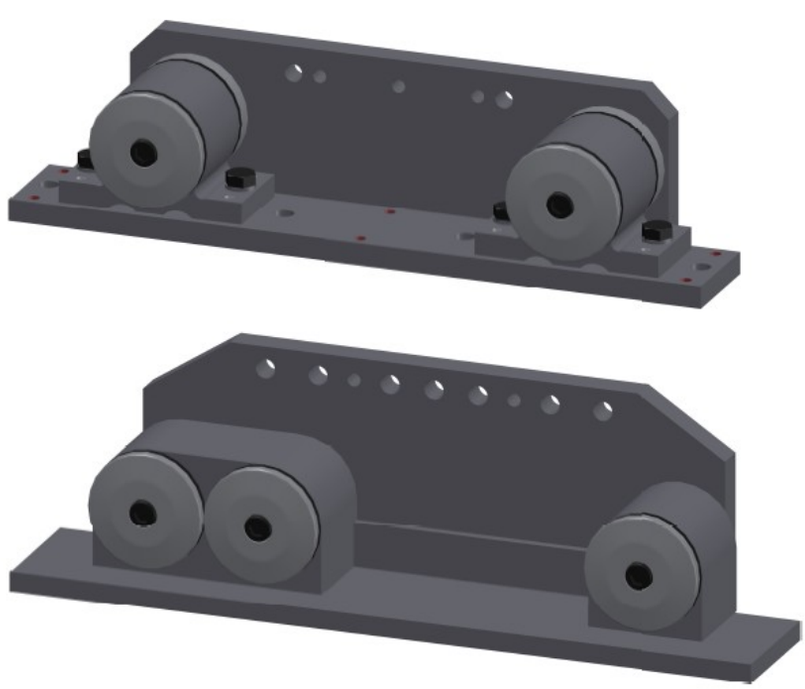

SPECIALS

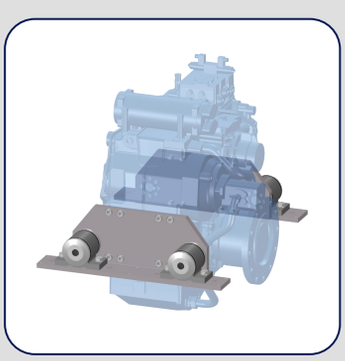

ANV Innovation LTD.
Ticaret Merkezi, Evliya Çelebi Mh.
Küme Sk. No:2 C:14, 34903 Tuzla/İstanbul

Phone : 0216 395 0718
E mail : info@anvinnovation.com
Web : www.anvinnovation.com