1.1 General

In every situation where diesel engines are used, noise and vibration will be generated! As well through the engine foundation, engine disturbance will travel along the exhaust system to be transmitted into the vessel wherever the system is in contact with the ships structure. Rubber Design BV has the experience and solutions to control the vibration and noise emissions from the exhaust system.
By flexibly mounting not only the engine but also the exhaust system, we can control most of these unwanted noise emissions. A significant reduction in the radiated noise and vibration can be achieved by introducing rubber-metal elements between the exhaust system and ship's structure.
For an explanation of how the noise reduction is achieved, the transmission speed of sound through steel and rubber needs to be understood. The transmission speed through steel is approximately 5000 m/sec. while through rubber, the transmission speed is approximately 45 to 90 m/sec.
By careful design and positioning of the rubber-metal elements it is possible to obtain a reduction of 8 to 10 dB (A) across the majority of the frequency range of 63 to 4000 Hz.
To give the optimum isolation, the number of mountings are kept to a minimum and positioned at strengthened locations in the ship's structure, for example deck levels, frame webs or specially constructed supports. Every installation takes into account the weight of the appropriate section of the system, the forces produced by ship movements and thermal expansion effects.

It is equally important to ensure the frequencies, produced by any part of the exhaust system, are not the same as the frequencies caused by the engine ignition, the first order frequencies of the engine or the propeller blade frequency.

Types of mounting.

Two basic types of mounting are used, fixed support mountings and stabiliser mountings. The fixed support mountings take the static and dynamic forces and determine the direction of the expansion in the exhaust system. The stabiliser mountings allow the thermal expansion movement caused by the high temperature of the exhaust piping within the ship's structure to be controlled. In case of horizontal piping the stabiliser mountings also carry the weight of the pipe.

Thermal insulation.

In order to protect the rubber against the high exhaust gas temperatures, it is necessary to install sufficient thermal insulation. It is essential to reduce the temperatures at the rubber-metal elements to less than 80°C. By using suitable insulation materials, it is possible to keep the temperature to a maximum of 50°C. It is always recommended to provide a minimum air gap of approximately 25 mm between the exhaust mounting and exhaust system. The above is applicable for the flexible fixed points, for the stabilisers the thermal insulation is attained to the length of the threaded rod.

1.2 Stabilizers

The stabilizers are sized and positioned to allow the maximum thermal expansion of the exhaust system between the fixed point in the exhaust and the stainless steel bellows.

It is necessary to place the stabilizers at an angle of approx. 90° to flexibly the support of the exhaust piping in the required directions.

If necessary, the length of the stabilizer can be reduced by one-third of its length.

The stabilizers are available in the following dimensions:

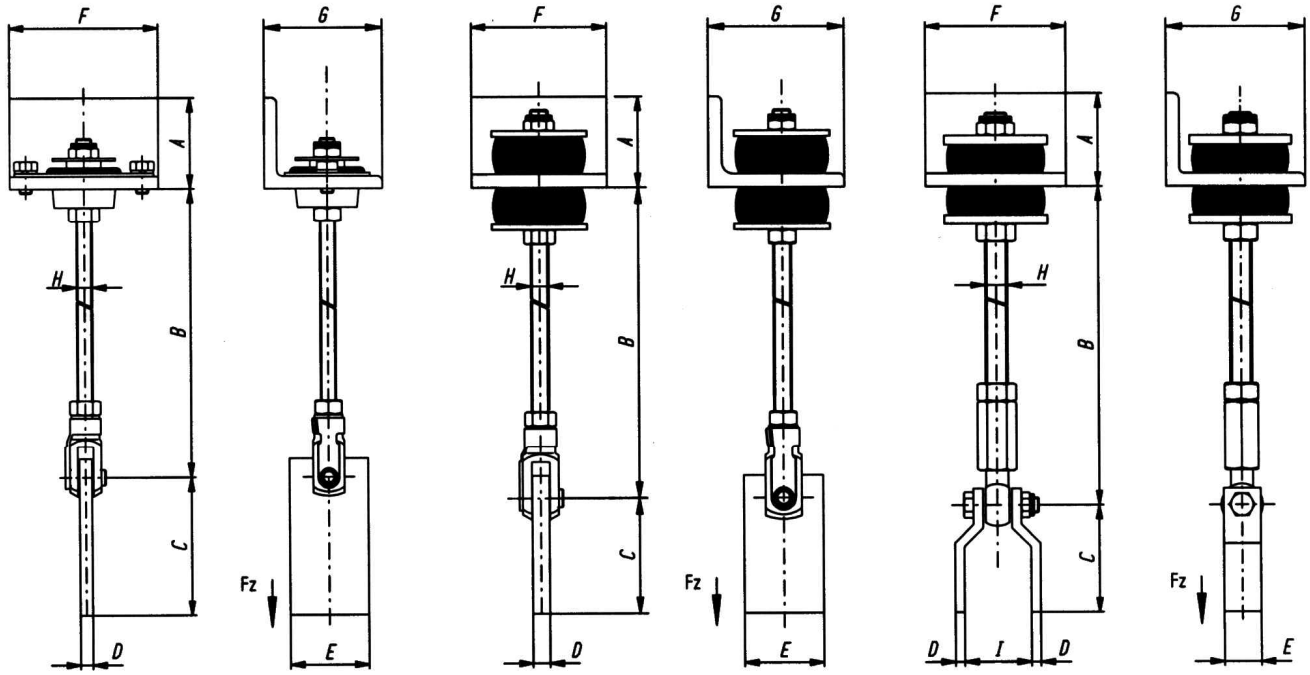

RD 101 **RD 251D / RD 501D** **RD 1001 / RD 2001 / RD 3001**

Type	A	B	C	D	E	F	G	H	I	Weight	Fz max	Hardness
RD 101	50	320	118	8	50	95	75	M10	-	1.4 kg	900 N	45° / 60°
RD 251D	65	300	135	10	60	100	100	M12	-	2.6 kg	3000 N	45° / 60°
RD 501D	80	470	130	15	70	120	120	M16	-	5.0 kg	4500 N	45° / 60°
RD 1001	100	530	115	10	40	150	150	M24	70	9.7 kg	9000 N	45° / 60°
RD 2001	100	530	130	10	50	180	200	M30	80	14.7 kg	20000 N	45° / 65°
RD 3001	100	555	215	15	65	230	200	M36	140	25.4 kg	36000 N	45° / 65°

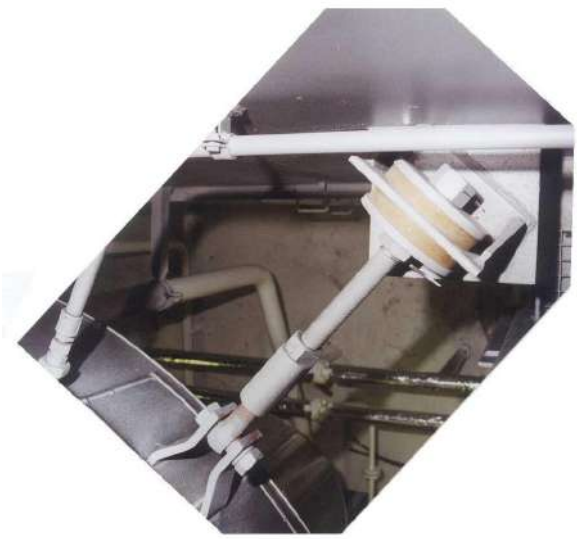

1.3 Hanging fixed points

The hanging fixed points support the exhaust system and control the dynamic forces which occur in the system while the vessel is in operation.

The fixed points control the direction of the thermal expansion within the exhaust system.

The hanging fixed points are available in the following dimensions:

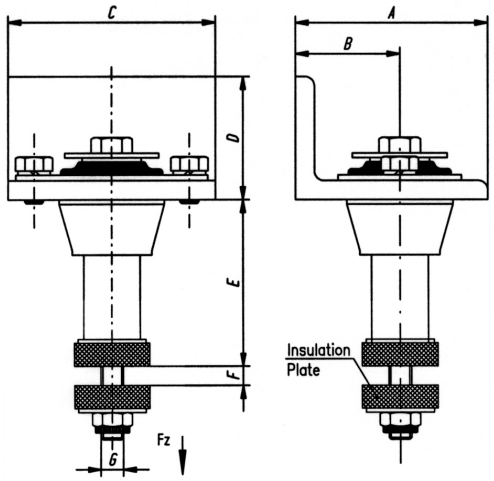

RD 101 / RD 251 / RD 501

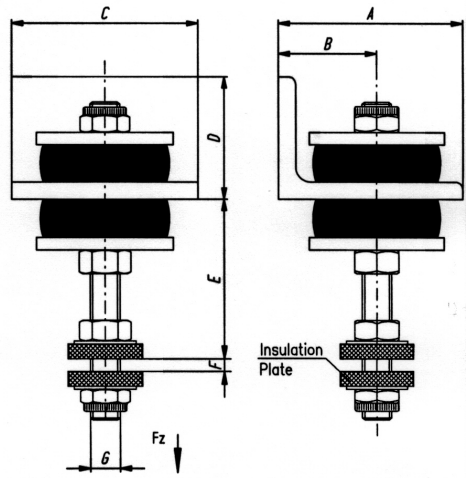

RD 251D / RD 501D / RD 1001 / RD 2001 / RD 3001

Type	A	B	C	D	E	F	G	Insulation plate	Weight	Fz max	Hardness
RD 101	75	40	95	50	50	Max.20	M10	35x35x12	0.9 kg	900 N	45° / 60°
RD 251	100	55	110	65	88	Max.15	M12	40x40x12	2.1 kg	5200 N	45° / 60° / 70°
RD 251D	100	55	100	65	105	-	M12	40x40x12	1.9 kg	3000 N	45° / 60°
RD 501	120	68	135	80	97	Max.20	M16	50x50x12	3.8 kg	9500 N	45° / 60° / 70°
RD 501D	120	65	120	80	100	-	M16	50x50x12	3.5 kg	4500 N	45° / 60°
RD 1001	150	80	150	100	130	-	M24	60x60x12	7.3 kg	9000 N	45° / 60°
RD 2001	200	110	180	100	130	-	M30	70x70x16	10.1 kg	20000 N	45° / 65°
RD 3001	200	110	230	100	155	-	M36	80x80x16	17.0 kg	34000 N	45° / 65°

1.4 Standing fixed points

The standing fixed points support the exhaust system and control the dynamic forces, which occur in the system while the vessel is in operation.

The fixed points control the direction of the thermal expansion within the exhaust system.

The standing fixed points are available in the following dimensions:

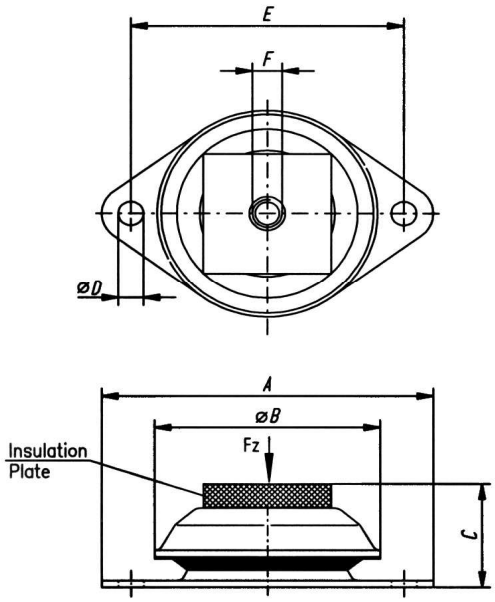

RD MP 2 / RD MP 3

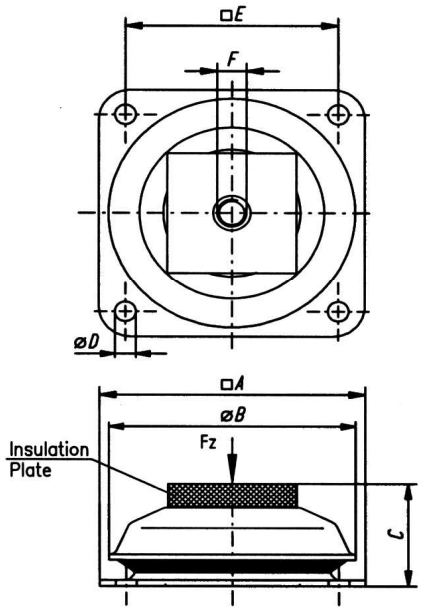

RD MP 4 / RD MP 5

Type	A	B	C	D	E	F	Insulation Plate	Weight	Fz max	Hardness
RD MP 2	134	82	45	11 (2x)	105 ±5	M12	40x40x12	0.5 kg	2250 N	45° / 55° / 65°
RD MP 3	170	113	55	13 (2x)	140	M12	40x40x12	1.1 kg	4750 N	45° / 55° / 65°
RD MP 4	168	150	66	13 (4x)	132	M16	80x80x12	2.2 kg	14000 N	45° / 55° / 65°
RD MP 5	220	206	94	18 (4x)	180	M20	100x100x20	5.4 kg	36000 N	45° / 55° / 65°

ANV Innovation LTD.
Ticaret Merkezi, Evliya Çelebi Mh.
Küme Sk. No:2 C:14, 34903 Tuzla/İstanbul

Phone : 0216 395 0718
E mail : info@anvinnovation.com
Web : www.anvinnovation.com