Rubber Design
vibration and noise control

DOCUMENTATION SHEET

Propulsion Equipment

TT-Mount type 3

TT3

General

The TT mounts are especially developed for the high powered / low weight, close coupled engine / gearbox combinations. The unique mounting design characteristics enables to transmit both Thrust and Torque forces whilst ensuring an excellent vibration isolation. The TT mounts have a linear stiffness over a wide load range varying from compression (–) to extension (+) necessary to maintain the optimum isolation properties of the Mass-Spring system formed by engine / gearbox and mounts. The close coupled gearbox reduces the engine rpm ' s and as a consequence, magnifies the engine torque. The reaction torque is being transferred over the TT mounts to the foundation as additional compression or extension forces which requires the TT mounts unique linear (compression / extension) stiffness to maintain the same high degree of isolation.

Remark

It is our intention to maintain the excellent standard of our products. Modifications and improvements may be made from time to time, therefore we advise to contact us before ordering.

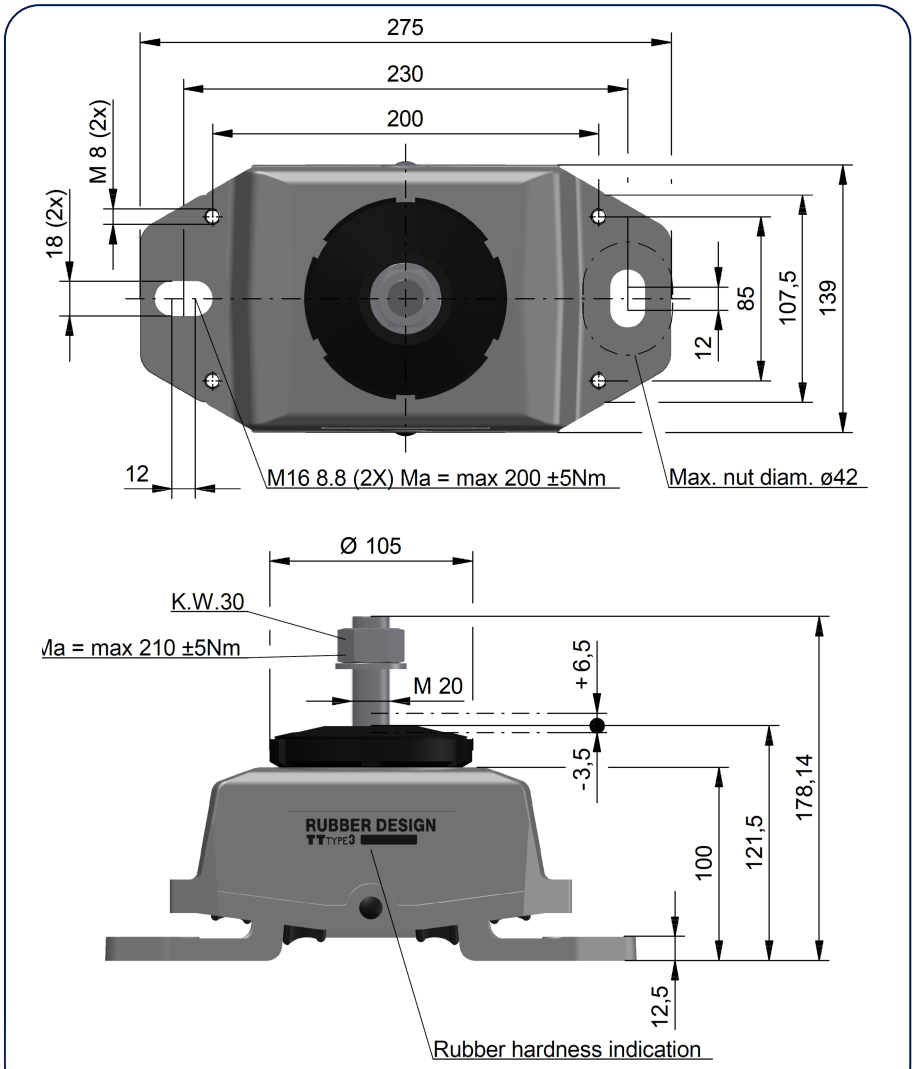

DIMENSIONS

TT3

Specification

The stiffness ration from Vertical (Z) to Longitudinal (X) is selected such to minimize displacements of the installation and connected equipment in this direction, which for instance is beneficial for shaft seals. The thrust capacity per mount, related to the actual mount load (FZ) can be taken from the characteristics table below.

	Initial load limit [N]	Max. Vertical load [N]		Max. Thrust load [N]
	at 4mm vertical compression (-) (static load)	Compression (-)	Tensile (+)	
45°Sh.A	2250	4000	2000	8500
50°Sh.A	2550	5500	2500	12000
55°Sh.A	3750	7250	3250	13500
60°Sh.A	4750	8750	4500	15500
65°Sh.A	6000	12500	6000	17750
70°Sh.A	8500	18000	9000	19000

CHARACTERISTICS

The standard rubber hardness is available from 45° Sh.A up to 75° Sh.A and can be used up to 90° C continuous and 110° C peak temperature, furthermore it will ensure low creep values. All TT mounts are marked with the rubber hardness derived from the individual stiffness test on one side of the top casting.

The TT mounts have an integrated limiter which limits the displacements in the vertical and horizontal direction.

Direction	Vertical up (+)	Vertical down (-)
Displacement limiter clearance [mm]	3,3	9,0

Vertical clearance at unloaded condition

CLEARANCE

Direction	Fz +	Fz -	Fy + or -	Fx + or -
Max Shockload (kN)	50	200	40	65

SHOCKLOADS

Selection

The mount selection for a Thrust and Torque transferring propulsion installation can generally be made according to the following guidelines and is based solely on mount loads. The selection made according to these guidelines will prevent overloading of the mountings.

1) Calculate the vertical (Z) static load per mount position;
2) Select mount type rubber hardness, not exceeding initial load limit.
3) Calculate the additional torque forces (+/-) in the full load situation per mount position.
4) Add the load per mount as found under 1 with the torque forces per mount as found under 3. Check if the calculated maximum and minimum vertical load points are within the allowed maximal vertical load range.
5) Determine the maximum thrust loads from the characteristics table.
6) Compare the total horizontal (X) thrust load of the installation with the total maximum thrust load of all mountings together. Select a different rubber hardness if required.

The analysis of the disturbing – versus natural frequencies of the mounting system should confirm the mount selection.

TYPE APPROVALS

ANV Innovation LTD.
Ticaret Merkezi, Evliya Çelebi Mh.
Küme Sk. No:2 C:14, 34903 Tuzla/İstanbul

Phone : 0216 395 0718
E mail : info@anvinnovation.com
Web : www.anvinnovation.com